Research Repository UCD

Title	Neuromuscular electrical stimulation: no enhancement of recovery from maximal exercise
Authors(s)	Caulfield, Brian, Malone, John, Blake, Catherine
Publication date	2014-09
Publication information	Caulfield, Brian, John Malone, and Catherine Blake. “Neuromuscular Electrical Stimulation: No Enhancement of Recovery from Maximal Exercise.” Human Kinetics, September 2014. https://doi.org/10.1123/ijspp.2013-0327.
Publisher	Human Kinetics
Item record/more information	http://hdl.handle.net/10197/7666
Publisher's statement	As accepted for publication.
Publisher's version (DOI)	10.1123/ijspp.2013-0327

Downloaded 2026-05-01 23:36:37

The UCD community has made this article openly available. Please share how this access benefits you. Your story matters! (@ucd_oa)

© Some rights reserved. For more information

ResearchGate

See discussions, stats, and author profiles for this publication at: http://www.researchgate.net/publication/259322468

Neuromuscular Electrical Stimulation Does Not Enhance Recovery From Maximal Exercise.

ARTICLE *in* INTERNATIONAL JOURNAL OF SPORTS PHYSIOLOGY AND PERFORMANCE · DECEMBER 2013

Impact Factor: 2.68 · Source: PubMed

DOWNLOADS
5

VIEWS
99

3 AUTHORS:

John K Malone
Abertay University
7 PUBLICATIONS **11** CITATIONS

SEE PROFILE

Catherine Blake
University College Dublin
78 PUBLICATIONS **607** CITATIONS

SEE PROFILE

Brian Caulfield
University College Dublin
167 PUBLICATIONS **1,359** CITATIONS

SEE PROFILE

Available from: John K Malone
Retrieved on: 17 June 2015

Title: Neuromuscular electrical stimulation does not enhance recovery from maximal exercise

Authors: John K. Malone, Catherine Blake, Brian Caulfield

ABSTRACT

Purpose: To investigate the use of neuromuscular electrical stimulation (NMES) during acute recovery between 2 bouts of maximal aerobic exercise. ***Methods:*** On 3 separate days, 19 trained male cyclists (28±7 yr; 76.4±10.4 kg; $_{P}\dot{V}O_{2max}$ (power output at $\dot{V}O_{2max}$) 417±44 W) performed a 3 min maximal cycling bout at 105% $_{P}\dot{V}O_{2max}$, prior to a 30 min randomly assigned recovery intervention of either: i) Passive (PAS: resting); ii) Active (ACT: 30% $_{P}\dot{V}O_{2max}$); or iii) NMES (5 Hz / 4 pulses at 500 μs). Immediately after, a cycle bout at 95% $_{P}\dot{V}O_{2max}$ to exhaustion (T_{LIM}) was performed. Heart rate (HR) and blood lactate (BLa) were recorded at designated time-points. Data were analyzed using repeated measures ANOVA with Tukey's HSD post hoc. Statistical significance threshold was $P<0.05$. ***Results:*** The T_{LIM} was significantly shorter for NMES compared to ACT (vs. 199.6 ± 69.4s vs. 250.7 ± 105.5s: $P=0.016$), but not PAS recovery (199.6 ± 69.4s vs. 216.4 ± 77.5s: $P=0.157$). The T_{LIM} was not significantly different between ACT and PAS (250.7 ± 105.5s vs. 216.4 ± 77.5s: $P=0.088$). The decline in BLa was significantly greater during ACT compared to NMES and PAS recovery ($P < 0.001$), with no difference between NMES and PAS. Also, HR was significantly higher during ACT compared to NMES and PAS recovery ($P < 0.001$), with no difference between NMES and PAS. ***Conclusions:*** NMES was less effective than ACT and comparable to PAS recovery when used between two bouts of maximal aerobic exercise in trained male cyclists.

Key Words: Athletic Therapy, Exercise Performance, Aerobic, Sports Physiology, Muscle Function

Introduction

There are many situations in sport where inadequate recovery can limit performance[1], especially for acute recovery (< 1 h) between bouts of exercise, since this is the time period typically required for full homeostasis to be returned following very high intensity exercise[2]. Certain competitive sports can involve multiple bouts during a single competitive event, often with minimal recovery. Examples include track and field, swimming, rowing, track cycling or cross-country sprint skiing, which can involve multiple bouts of exercise at intensities close to, or above maximal aerobic power ($\dot{V}O_{2max}$), i.e., < 10 min of maximal exercise. For example, rowing regattas normally consist of 2000m races during an event meet, with bouts typically lasting between 6 and 7 min. Track cycling events such as the individual or team pursuits comprise of maximal bouts of < 5 min duration. Sports like cross-country sprint skiing, comprise of interval type competition, e.g., 4 heats of approximately (~) 2-3 min duration, separated by very short rest periods (~ 15-20 min between final heats), over a 2 – 3 hour period[3]. Recovery periods between bouts can often be minimal, particularly where individuals are involved in multiple events during a meet. Athletes participating in events

like these, particularly at or near elite level, where the margins between success and failure are often very small, should theoretically benefit from enhancing the recovery process between bouts. Similar beneficial recovery effects should also improve the quality and safety of athlete training sessions, by potentially reducing fatigue, muscle soreness or even injury risk[4].

Due to its purported analgesic effects on muscle soreness[5] and its effect of increasing localized blood flow[6], the use of sub-tetanic neuromuscular electrical stimulation (NMES) to promote acute (< 1 h), medium (1-24 h) and long-term (> 24 h) recovery has received increased attention in recent years[4]. However, only a small body of this research has previously investigated the use of NMES during acute recovery[7-10]. Two of these studies[8,10] focused on recovery from bouts of supra-maximal anaerobic exercise, with another[7] using the small musculature of the forearm flexors. Neric et al.[9] is the only study to have focused on acute recovery from exercise, the intensity of which was close to the domain of maximal aerobic exercise. However, they did not investigate post recovery exercise performance.

To the knowledge of the investigators, there are no previous studies that have investigated the acute effects of NMES on post recovery exercise performance, when applied to the large musculature of the lower body between bouts of maximal aerobic exercise lasting < 10 min. The duration of these bouts, the musculature used, and the recovery period duration are scenarios very applicable to many sporting situations in both training and competition. The aims of this study were to; 1) Investigate the effectiveness of NMES compared to traditional recovery methods when used on the large muscle groups of the lower body within a 30 min period (a duration too short to achieve complete recovery) between two bouts of maximal aerobic exercise; 2) Investigate whether there were any associations observed between recovery intervention, heart rate (HR), blood lactate (BLa), and subsequent post exercise fatigue.

The principal hypotheses were that NMES would be effective for maintaining subsequent exercise performance and lowering post exercise BLa compared to Passive (PAS) recovery. These hypotheses were based on the fact that NMES is known to induce hyperaemia[12], and has been previously shown to increase blood flow[6,13]. However, the specific sub-tetanic, continuous stimulation parameters used in this study, have been shown previously to be effective at increasing systemic blood flow, muscle activation and oxygen uptake by mimicking the effects of shivering, without causing undue discomfort[11]. Therefore, it was hypothesized that hyperaemia would be increased (reflected systemically by a small but significant increase in HR) to a greater extent during this continuous muscle contraction protocol compared to our previous intermittent protocol[8], resulting in a greater muscle pump effect and thus metabolite clearance.

Methods

Subjects

Twenty one trained male amateur cyclists volunteered to participate in this study. Due to work commitments, two withdrew prior to completion, leaving 19 subjects included for final analysis (28 ± 7 yr; 178.7 ± 6.3 cm; 76.4 ± 10.4 kg; Body-fat: 10.8 ± 5.3 %; $\dot{V}O_{2max}$: 56.8 ± 6.4 $ml \cdot min^{-1} \cdot kg^{-1}$). Subjects were recruited from competitive cycling (Ireland A classification, *n*=17)/ triathlete clubs (*n*=2), and were involved in regular training (≥ 3 sessions/wk) and competition (≥1 month). Subjects were fully informed of procedures relating to the study and

completed a pre-test medical screening questionnaire and provided written informed consent prior to participation. Subjects were only included if they were healthy trained male cyclists aged 18–40 y/o, free from recent injury (< 3 months) or any acute/ chronic metabolic or cardiovascular complications. Participation was voluntary and subjects had the right to withdraw at any stage without question. All procedures were approved by the Institutional Research Ethics Board.

Design

To mimic competitive sports training/ competition scenarios involving fatiguing maximal intensity exercise bouts (< 10 min) with inadequate recovery duration intervals (< 1 h), subjects performed a 3 min bout at 105% power output at $\dot{V}O_{2max}$ ($_{p}\dot{V}O_{2max}$) prior to a randomly assigned 30 min recovery intervention period consisting of either: NMES, PAS or ACT recovery. Immediately after, subjects performed a maximal aerobic cycle bout at 95% $_{p}\dot{V}O_{2max}$ to exhaustion (T_{LIM}). The performance scores from the T_{LIM} were compared to assess which recovery intervention had the greatest positive effect on subsequent performance. To monitor physiological responses to the maximal aerobic bouts and during the recovery intervention period, HR and BLa were recorded at designated time points throughout (Figure 3).

Methodology

Subjects attended the institutional human performance laboratory on four separate occasions. To control for circadian rhythm, sessions were carried out at the same time of day (± 1 h)[14], with a minimum of 72 h between sessions to allow full recovery[15]. Subjects were instructed to refrain from any form of exercise and alcohol consumption[16], to eat normally and to stay well hydrated during the 24 h prior to each session. They were also instructed to abstain from caffeine consumption on the day of each session due to the possible stimulatory effects of caffeine on high intensity exercise[17], or nutritional ergogenic aids that may have impacted results (e.g., creatine supplementation). Subjects recorded a food and activity log during the 24 h prior to session 1, and were instructed to stringently replicate this log for subsequent sessions. They were made aware of the importance of their compliance to data accuracy. All sessions were carried out on an electro-magnetic braked cycle ergometer (Lode Sport Excalibur, Netherlands).

Session 1: Height (cm), Body mass (kg) and Body fat %[18] were recorded prior to performing a graded maximal incremental cycle test. This test was conducted to: i) establish trained status; ii) determine $_{P}\dot{V}O_{2max}$ in order to determine the intensity of the subsequent ACT recovery. The test consisted of cycling at 100 W for 1 min, with each 1 min stage thereafter increasing by 30 W until volitional exhaustion. For more details on these procedures, please refer to our previous study[8].

NMES Familiarization: The NMES device (NT2010, Biomedical Research Ltd, Galway, Ireland) delivered current waveforms via an array of adhesive electrodes to the quadriceps and hamstring musculature (Figure 1). A single phase program was used to produce rhythmical contractions, by delivering bursts of 4 pulses, each of 500μs duration at a packet frequency of 5 Hz for a 20 min period. These parameters are all within the ranges suggested when used for the purpose of promoting muscle recovery (4). None of the subjects reported prior experience of using NMES and were fully informed about all procedures and any potential risks (e.g., possible skin irritation). Because the perception of intensity of NMES is

highly variable among individuals and thus, needs to be selected on an individual basis[19], subjects increased the stimulation intensity to the highest comfortable level tolerable (i.e., before any subjective discomfort was felt). The maximum current output delivery of the device was 140 mA (Figure 2). However, current output chosen by subjects, were as expected, considerably lower than this (67.2 ± 8.4 mA).

Pre-Intervention Test (105% $_{P}VO_{2max}$) Familiarization: To help eliminate any practice/ learning effect of performing the 105% $_{P}\dot{V}O_{2max}$ cycle bout in subsequent sessions, a familiarization trial, which included a standardized warm-up lead-in (see Figure 3), was performed. To replicate subjects' natural environment, the cycle ergometer was set-up to each subjects own individual preference, with the settings chosen, used for all subsequent testing sessions. They were also encouraged to use their own pedals and cleats.

Sessions 2-4: Each session consisted of a standardized warm-up, a 3 min maximal aerobic exercise bout (105% $_{P}\dot{V}O_{2max}$), a 30 min recovery intervention, and a maximal aerobic exercise bout to exhaustion (T_{LIM}) at 95% $_{P}\dot{V}O_{2max}$ (Figure 3).

Firstly, subjects performed a standardized 8 min warm-up (80 rev.min^{-1} for 4 consecutive 2-min stages (55, 70, 85 and 100W), prior to performing a maximal aerobic trial at 105% $_{P}\dot{V}O_{2max}$, whilst maintaining a cadence of ~100 rev.min^{-1} for 3 min, using standardized verbal encouragement. Due to the intense nature of the trial, ~ 50% of subjects were unable to complete the 3 min protocol (avg. time attained 160s ± 10s). In these cases, they cycled to exhaustion with the time attained used for subsequent sessions. Immediately after, a 30 min randomly assigned recovery intervention period began (subjects selected the order from concealed envelopes during session 1), consisting of either: 1) PAS: lying on a plinth with a back rest angle of 15 degrees; 2) ACT: cycling at 30% $_{P}\dot{V}O_{2max}$[20]; or 3) NMES: 5 Hz / 4 pulses at 500 μs, (lying similar to PAS). As there was a time requirement for subjects to put-on/ take off the NMES apparatus, 5 min was allowed either side for NMES, and it was decided to that ACT recovery duration be the same. This ensured that the total time period of recovery was exactly 30 min duration overall, regardless of intervention type (see Figure 3). Upon completion of the 30 min period (at precisely 29min:50s), subjects increased cadence from 0 to 110 rev.min^{-1} during a 10 s period of unloaded cycling, prior to the cycling intensity increasing in a square wave fashion to 95% $_{P}\dot{V}O_{2max}$. Using standardized verbal encouragement, subjects were instructed maintain ~ 100 rev.min^{-1} cadence and were instructed to keep cycling to exhaustion, even when the rev.min^{-1} dropped in the latter stages of the trial. The T_{LIM} trial was terminated immediately upon cadence dropping under 70 rev.min^{-1} (to nearest 0.1s). Subjects remained passively seated for 5 min to enable a post exercise BLa sample to be obtained.

To control for variables such as motivation that may have affected results; 1) subjects were blinded to time, both during and at the completion of the trail, and were not made aware of time achieved during any of the sessions until the completion of their final T_{LIM} trial during session 4; 2) all verbal encouragement was delivered by the investigator using a written script, ensuring subjects received the exact same strong standardized verbal encouragement at the exact same time during pre and post intervention trials in all sessions[21].

Blood Lactate and Heart Rate: Small capillary blood samples (5 μL) were taken from the index or middle finger at specific time points (Figure 3), and immediately analyzed using an

Analox LM5 Champion lactate analyzer (Analox Instruments Ltd., London, England). Subjects' HR were recorded (Polar RS400, Finland) at specific time-points (Figure 3).

Statistical Analysis

A priori sample size calculation was based on published T_{LIM} data[22]. Estimation with the statistical software programme G*Power 3.1.3[23] indicated that a minimum sample of 12 subjects was required to detect a difference of 10% in T_{LIM} between the recovery interventions, with 90% power and alpha=0.05 for one way ANOVA. Statistical analysis was conducted using PASW statistics 18 software (SPSS Inc., Illinois, USA). Results are reported as Mean±SD, with statistical significance set at $P<0.05$ (unless stated). Differences in T_{LIM} during the 95% $_{P}\dot{V}O_{2max}$ trials were analyzed using a one-way ANOVA. The effects of intervention type on BLa and HR at specified points were analyzed using a two-way R-M ANOVA (recovery method x time). Where significant main effects for interventions were observed, Tukey's HSD *post hoc* tests were applied to examine differences.

Results

The T_{LIM} was significantly shorter for NMES compared to ACT recovery (199.6 ± 69.4 s vs. 250.7 ± 105.5 s (difference of 20.4%): $P=0.016$,). There were no significant differences found for T_{LIM} between NMES and PAS recovery (199.6 ± 69.4 s vs. 216.4 ± 77.5 s (7.8%): $P=0.157$), or between ACT and PAS recovery (250.7 ± 105.5 s vs. 216.4 ± 77.5 s (13.7%): $P=0.088$) (Figure 4).

During the recovery intervention period at 10, 15, 20 and 30 min, BLa was significantly lower for ACT compared to both NMES and PAS ($P<0.001$). At 5 min post 95% $_{P}VO_{2max}$ T_{LIM} bout, BLa was significantly lower for ACT compared to PAS recovery. There were no significant differences between NMES and PAS recovery at any time-point (Figure 5).

During the recovery intervention period at 10, 15, 20 and 25 min and at the end of the cycling bout to exhaustion, HR was significantly higher for ACT compared to NMES and PAS ($P<0.001$). During the recovery intervention period at 5 min, HR was significantly higher for ACT compared to NMES ($P=0.017$) and PAS ($P<0.001$). There were no significant differences between NMES and PAS recovery at any time-point, except during the recovery intervention period at 5 and 15 min, where NMES was significantly higher (Figure 6).

Discussion

The principal findings for this study were that T_{LIM} for the post recovery maximal aerobic bout after NMES was significantly shorter than after ACT recovery, with no significant differences found between NMES and PAS or between ACT and PAS recovery. Also, ACT recovery had a significantly greater BLa clearing effect, with a significantly higher corresponding HR, during the recovery intervention period compared to both the NMES and PAS interventions, with no differences found between NMES and PAS.

The rationales for using this study design were: 1) to induce a sensation of extreme fatigue prior to the recovery intervention period using the 3 min bout at 105% $_{P}\dot{V}O_{2max}$. This intensity was chosen to induce a maximal fatiguing effort of ~ 3 min, which could be replicated on

multiple days and would mimic many sporting activities both in competition and training. Cycling was chosen as it is a mode of exercise where variables can be precisely controlled, has direct application to the sport of cycling, and provides metabolic specificity with other aforementioned sports. Secondly, to use a recovery period too short for complete recovery to be achieved prior to commencement of the T_{LIM} trial. The BLa and HR profiles verified this, as neither had fully returned to base-line levels prior to the start of the T_{LIM} trial (Figures 5 and 6). This was important as it mimics many sporting scenarios where recovery durations are insufficient. It also enabled the recovery intervention modalities to be directly compared to assess which was the most effective for enhancing subsequent performance.

The principal hypotheses were that NMES would be effective for maintaining subsequent exercise performance and lowering post exercise BLa compared to PAS recovery. This study used a stimulation device similar to our previous study[8]. However, whereas an intermittent NMES protocol was used for that study, this study used a continuous stimulation protocol, which is more typically used for these types of studies[7,9,10,24]. The NMES parameters used in this study were specifically designed to minimize muscle fatigue and elicit a mild aerobic effect using sub-tetanic stimulation, and has previously been shown to increase muscle activation and oxygen uptake by mimicking the effects of shivering, without causing undue discomfort[11]. Also, although direct blood flow was not measured in the study, NMES has been previously shown to increase blood flow[6,13]. Therefore, we hypothesised that any increase in localized blood flow due to a 'muscle pump' effect would help to increase metabolite removal from the fatigued muscles to a greater extent than PAS recovery, especially as subjects used NMES at quite a high intensity without any sensation of discomfort (67.2 ± 8.4 mA). We speculated that a small but significant increase in overall systemic blood flow, would be reflected by increased HR, especially as these NMES parameters have previously shown increases in subject HR (albeit using a different study protocol) in healthy adults[11]. However, the resultant findings do not support our hypothesis. In fact, PAS recovery actually showed a trend (suggesting better performance, although not statistically significant) for better T_{LIM} performance compared to NMES (216.4 ± 77.5s vs. 199.6 ± 69.4s, P=0.157). Also, whilst HR was consistently higher at all times points during the recovery intervention period for NMES compared to PAS recovery, it only reached significance at 5 and 15 min (Figure 6).

Whilst the findings for HR and BLa were similar to our previous study[8], the findings for performance differed, as we found no significant differences across interventions when bouts of maximal anaerobic exercise were performed, in a similar trained population. Interestingly, a recent study[25] investigated contrast water immersion (CWI) using a similar protocol to ours (30 min recovery intervention prior to a T_{LIM} trial). They suggested the principal reason for the enhanced effect of CWI therapy compared to PAS recovery was related to the increased HR response during the CWI, which they speculated increased blood flow to the muscles and thus increased metabolite removal during the recovery period. Interestingly, they found that CWI resulted in relatively better performance during their T_{LIM} trials (maximal aerobic) compared to their multiple Wingate exercise trials (maximal anaerobic). Whereas, NMES performed relatively poorer in this study (maximal aerobic) compared to our previous study (maximal anaerobic)[8]. The reasons for these findings are unclear. However, it may have been due to CWI significantly increasing HR upon each cold immersion compared to PAS recovery their study[25], something that we failed to show in either this, or our previous study[8].

The findings for BLa with NMES contrasted with previous studies[9,24], who found that BLa was lowered significantly faster with NMES compared to PAS recovery. The rationale for

investigating the effects of NMES on Bla is that the previous studies that have found positive effects of NMES on BLa clearance compared to PAS recovery, either did not investigate post intervention performance[9,24], failed to show any subsequent performance benefit[7,8] or found a positive effect on performance (baseball pitching speed)[10]. Importantly, two of these studies[9,24], based their conclusions solely on the effects of NMES on subsequent BLa lowering. However, recent evidence appears to suggest that the direct effects of lactate *per se* on muscle fatigue may be minimal, although much is still currently unknown about the fatigue phenomenon [26]. The reasons for the contrasting findings are unclear, however may be related to different protocols and/ or NMES parameters used in their studies. Previous studies either did not state the intensity of stimulation used[24], or used intensities considerably lower than our study (67.2 ± 8.4 vs. ~ 30 mA)[9].

The possibility that the NMES protocol itself exerted a potential negative impact on the recovery process (despite comfortable contraction levels) cannot be dismissed, especially as NMES is known to induce muscle fatigue to a greater extent than voluntary muscle activation[19]. Muscle recruitment during NMES is non-selective and spatially fixed, resulting in Type II muscle fiber activation even at low stimulation intensities[27]. Therefore, it is possible that there were fatigue accrued to larger Type II fibers during the NMES recovery intervention period (Type II fibers would have been inactive during the ACT intervention) which may have negated any potential positive influences of NMES on recovery, thus affecting performance in the subsequent T_{LIM} trial. However, every attempt was made to minimize this by using stimulation parameters that were designed to limit fatigue by incurring less spatially fixed stimulation at a given intensity (Figure 2). This study also used very stringent methodology to ensure that there were minimal influences of external factors that may have affected results. We are also very confident that there were no familiarization effects of performing the T_{LIM} bouts, especially as subjects were trained cyclists who performed a familiarization session. Our data analysis confirms this, as the ratio of which sessions the T_{LIM} best scores occurred is 6:6:7 for sessions 2, 3, and 4 respectively.

Practical Applications

It appears NMES is less effective than ACT, and does not offer any additional performance advantage over traditional PAS recovery, at least for enhancing acute recovery from maximal aerobic exercise. Although this study used trained cyclists on a cycle ergometer, which may not have mechanical specificity with some of the other aforementioned ‘power aerobic’ sports, there is metabolic specificity with these sports, regardless of mode. Therefore, these findings should be of value to any power aerobic athlete and not just cyclists. However, athletes who use NMES for similar purposes need to consider that there can be considerable individual variability when using NMES, due to factors such as variations in underlying adipose tissue affecting current in the stimulated region[19]. In this study, only a small minority of subjects (3 of 19) responded positively to NMES compared to ACT and PAS recovery. There was also variability in subjects’ perceptions of tolerance and discomfort, mirrored by the variability in intensities used. This variability is not unusual however, and helps explain why: 1) this, and previous studies[28,29,30] used subjective, rather than objective selection of intensity; 2) there is not a universal recommendation on the optimum intensity of NMES that should be used during recovery from fatiguing exercise. Although, it is likely that intensity needs to be comfortable, but high enough to induce sufficient muscle

contractions (to act as a muscle pump) for metabolite clearance, whilst not being too high, that will induce muscle fatigue.

Conclusions

Based on these findings, ACT recovery appears to be the optimal method for enhancing short-term recovery between two bouts of maximal aerobic exercise, at least in a trained population. NMES was less effective than ACT, and comparable to PAS recovery for enhancing short-term recovery between 2 bouts of maximal aerobic cycle exercise in a trained male population.

Acknowledgements

The authors wish to thank Dr. Louis Crowe for his expert help with the program design for the NMES device, and Mr. Romain Denis for his laboratory assistance during data collection. The authors also wish to thank the subjects for taking part in this research.

The authors gratefully acknowledge the funding supplied by Bio Medical Research (BMR) Ltd., Galway, Ireland and Enterprise Ireland to enable to study to be completed. BMR is the manufacturer of the NMES device used in this study.

The results of the current study do not constitute endorsement of the product by the authors or the journal.

References

1. Higgins TR, Heazlewood IT, and Climstein M. A random control trial of contrast baths and ice baths for recovery during competition in U/20 rugby union. *J Strength Cond Res*. 2011;25(4):1046-1051.

2. Barnett A. Using recovery modalities between training sessions in elite athletes: does it help? *Sports Med*. 2006; 36(9):781-796.

3. Mikkola J, Laaksonen M, Holmberg HC, Vesterinen V, and Nummela A. Determinants of a simulated cross-country skiing sprint competition using V2 skating technique on roller skis. *J Strength Cond Res*. 2010;24(4):920-928.

4. Babault N, Cometti C, Maffiuletti NA, and Deley G. Does electrical stimulation enhance post-exercise performance recovery? *Eur J Appl Physiol*. 2011;111(10):2501-2507.

5. McLoughlin TJ, Snyder AR, Brolinson PG, and Pizza FX. Sensory level electrical muscle stimulation: effect on markers of muscle injury. *Br J Sports Med*. 2004;38(6):725-729.

6. Grunovas A, Stilinska V, Poderys J and Trinkunas E. Peripheral and systemic circulation after local dynamic exercise and recovery using passive foot movement and electrostimulation. *J Sports Med & Phys Fitness*. 2007;47(3):335-343.

7. Heyman E, De Geus B, Mertens I, and Meeusen R. Effects of four recovery methods on repeated maximal rock climbing performance. *Med Sci Sports Exerc*. 2009;41(6):1303-1310.

8. Malone JK, Coughlan GF, Crowe L, Gissane GC, and Caulfield B. The physiological effects of low-intensity neuromuscular electrical stimulation (NMES) on short-term recovery from supra-maximal exercise bouts in male triathletes. *Eur J Appl Physiol*. 2012;112(7):2421-2432.

9. Neric FB, Beam WC, Brown LE, and Wiersma LD. Comparison of swim recovery and muscle stimulation on lactate removal after sprint swimming. *J Strength Cond Res*. 2009;23(9):2560-2567.

10. Warren CD, Brown LE, Landers MR and Stahura KA. Effect of three different between-inning recovery methods on baseball pitching performance. *J Strength Cond Res*. 2011;25(3):683-688.

11. Crognale D, De Vito G, Minogue C, Crowe L, Grosset JF and Caulfield B. Neuromuscular electrical stimulation can elicit aerobic exercise response without undue discomfort in healthy physically active adults. *J Strength Cond Res*. 2013;27(1):208-215.

12. Miller BF, Gruben KG and Morgan BJ. Circulatory responses to voluntary and electrically induced muscle contractions in humans. *Phys Ther*. 2000;80(1):53-60.

13. Levine SP, Kett RL, Gross MD, Wilson BA, Cederna PS and Juni JE. Blood flow in the gluteus maximus of seated individuals during electrical muscle stimulation. *Arch Phys Med Rehabil*. 1990;71(9):682-686.

14. Souissi N, Bessot N, Chamari K, Gauthier A, Sesboue B, and Davenne D. Effect of time of day on aerobic contribution to the 30-s Wingate test performance. *Chronobiol Int*. 2007;24(4):739-748.

15. Cortis C, Tessitore A, Perroni F, Lupo C, Pesce C, Ammendolia A, and Capranica L. Interlimb coordination, strength, and power in soccer players across the lifespan. *J Strength Cond Res*. 2009;23(9):2458-2466.

16. Watt KK, Hopkins WG, and Snow RJ. Reliability of performance in repeated sprint cycling tests. *J Sci Med Sport*. 2002;5(4):354-361.

17. Astorino TA and Roberson DW. Efficacy of acute caffeine ingestion for short-term high-intensity exercise performance: a systematic review. *J Strength Cond Res*. 2010;24(1): 257-265.

18. Jackson AS and Pollock ML. Generalized equations for predicting body density of men. *Br J Nutr*. 1978;40(3):497-504.

19. Maffiuletti NA. Physiological and methodological considerations for the use of neuromuscular electrical stimulation. *Eur J Appl Physiol*. 2010;110(2):223-234.

20. Bond V, Adams RG, Tearney RJ, Gresham K, Ruff W. Effects of active and passive recovery on lactate removal and subsequent isokinetic muscle function. *J Sports Med Phys Fitness*. 1991;31(3):357-361.

21. Maffiuletti NA and Bendahan D. Mesurement methods of muscle fatigue. In: Williams C & Ratel S, eds, *Human Muscle Fatigue*. Oxon, Routledge: 2009: 25.

22. Costa VP, De Matos DG, Pertence LC, Martins JAN, De Lima JRP. Reproducibility of cycling time to exhaustion at VO2max in competitive cyclists. *J Exerc Physiol Online* 2011;14(1):28-35.

23. Faul F, Erdfelder E, Lang AG, and Buchner A. G*Power 3: a flexible statistical power analysis program for the social, behavioral, and biomedical sciences. *Behav Res methods.* 2007;39(2):175-191.

24. Byoundo S, Kim D, Dongjea C, Changki K, and Hyungsoo S. The effect of electrical stimulation on blood lactate after anaerobic muscle fatigue induced in taekwondo athletes. *J Phys Ther Sci*. 2011;23(2):271-275.

25. Crampton D, Donne B, Egana M, and Warmington SA. Sprint cycling performance is maintained with short-term contrast water immersion. *Med Sci Sports Exerc*. 2011;43(11):2180-2188.

26. Allen DG, Lamb GD, Westerblad H. Skeletal muscle fatigue: cellular mechanisms. *Physiol Rev.* 2008;88(1):287-332.

27. Gregory CM and Bickel CS. Recruitment patterns in human skeletal muscle during electrical stimulation. *Phys Ther*. 2005;85(4):358-364.

28. Lattier G, Millet GY, Martin A, and Martin V. Fatigue and recovery after high-intensity exercise. Part II: Recovery interventions. *Int J Sports Med*. 2004;25(7):509-515.

29. Tessitore A, Meeusen R, Cortis C, and Capranica L. Effects of different recovery interventions on anaerobic performances following preseason soccer training. *J Strength Cond Res*. 2007;21(3):745-750.

30. Cortis C, Tessitore A, D'Artibale E, Meeusen R, and Capranica L. Effects of post-exercise recovery interventions on physiological, psychological, and performance parameters. Int J *Sports Med*. 2010;31(5):327-335.

Figure Captions

Figure 1: Pictures showing A) anterior view and B) posterior view of the specially designed garment wraps and the position of electrodes on the quadriceps and hamstring muscle groups (left leg wrap omitted for illustration purposes only) (Taken from Malone et al., 2012).

Figure 2: Illustration showing color coded stimulation pulse pathways and pulse intervals for the lower limb quadriceps and hamstrings. Bursts of 4 pulses were delivered continuously at a frequency of 5 Hz.

RUH (right upper hamstrings), RLH (right lower hamstrings), RUQ (right upper quadriceps), RLQ (right lower quadriceps), LUQ (left upper quadriceps) LLQ (left lower quadriceps) LUH (left upper hamstrings) LLH (left lower hamstrings) (Reproduced with permission from Crognale et al. (2013)).

Figure 3: Study protocol timeline showing pre-intervention (L), recovery intervention (M) and post-intervention (R).

Figure 4: Participant data (Mean ± SD) for time to exhaustion (T_{LIM}) during post intervention exercise bout @ 95% VO_{2max} for NMES, PAS and ACT recovery interventions.
***** Significant difference between ACT vs. NMES recovery interventions ($P < 0.05$).

Figure 5: Participants BLa (Mean ± SD) during study protocol for NMES, PAS and ACT recovery interventions
***** Significant difference between ACT vs. NMES and PAS recovery interventions ($P < 0.001$)
† Significant difference between ACT vs. PAS recovery interventions ($P < 0.05$).

Figure 6: Participants HR (Mean ± SD) during study protocol for NMES, PAS and ACT recovery interventions.
***** Significant difference between ACT vs. NMES and PAS recovery interventions ($P < 0.001$)
† Significant difference between ACT vs. PAS recovery interventions ($P < 0.001$)
‡ Significant difference between NMES vs. PAS recovery interventions ($P < 0.05$)
¥ Significant difference between NMES vs. ACT recovery interventions ($P < 0.05$).

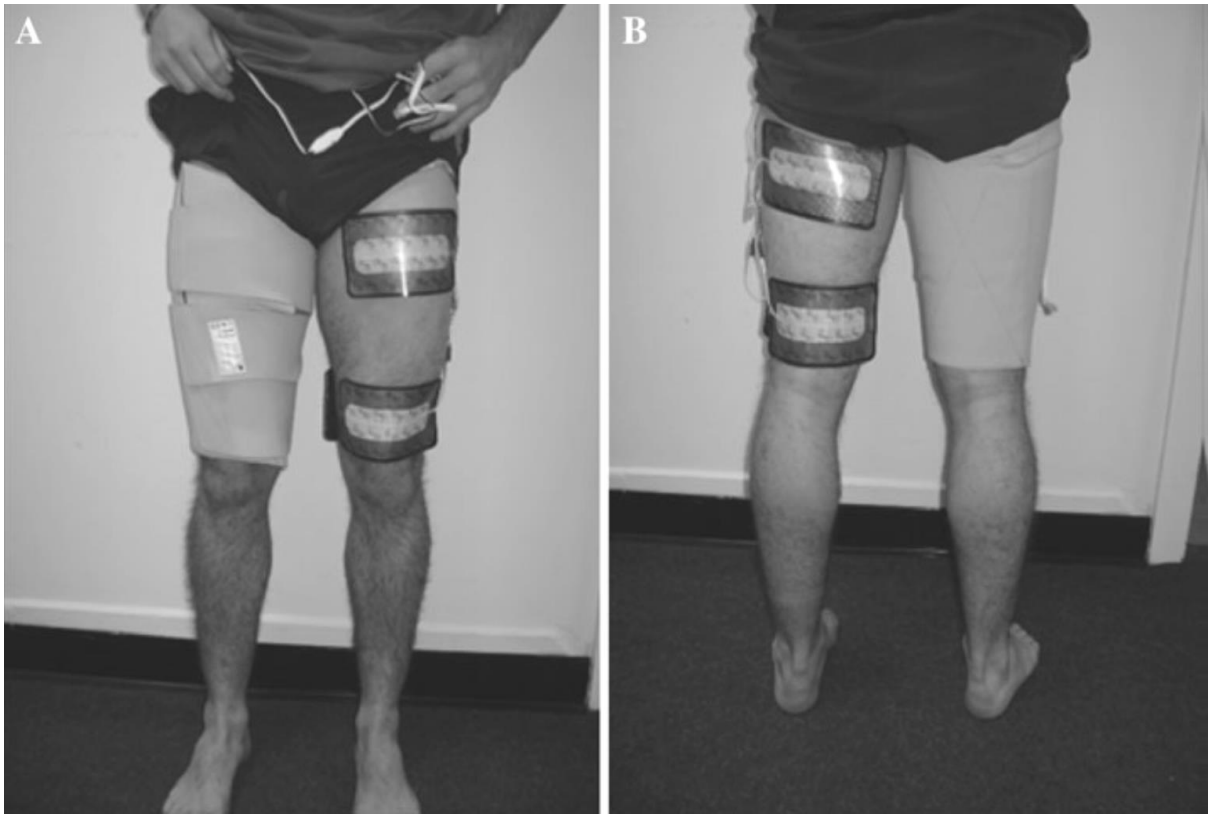

Figure 1: Pictures showing A) anterior view and B) posterior view of the specially designed garment wraps and the position of electrodes on the quadriceps and hamstring muscle groups (left leg wrap omitted for illustration purposes only) (Taken from Malone et al., 2012).

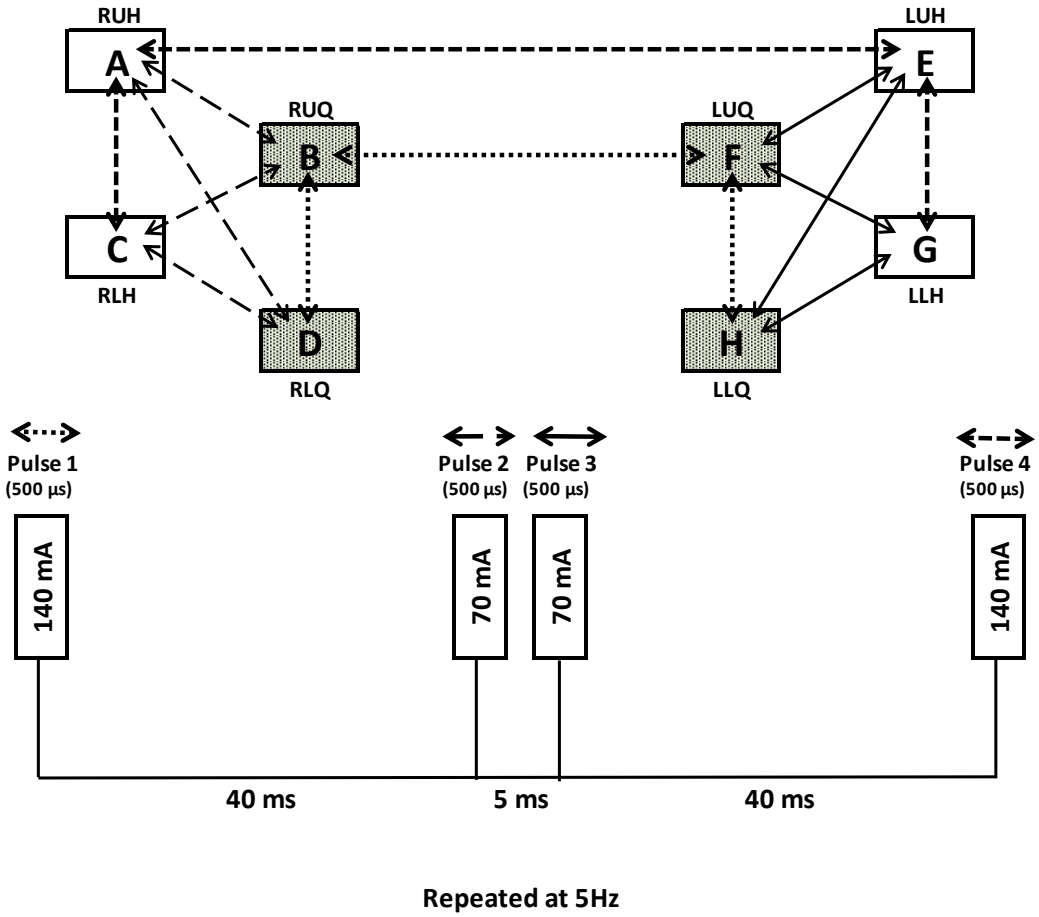

Figure 2: Illustration showing color coded stimulation pulse pathways and pulse intervals for the lower limb quadriceps and hamstrings. Bursts of 4 pulses were delivered continuously at a frequency of 5 Hz.

RUH (right upper hamstrings), RLH (right lower hamstrings), RUQ (right upper quadriceps), RLQ (right lower quadriceps), LUQ (left upper quadriceps) LLQ (left lower quadriceps) LUH (left upper hamstrings) LLH (left lower hamstrings) (Reproduced with permission from Crognale et al. (2013)).

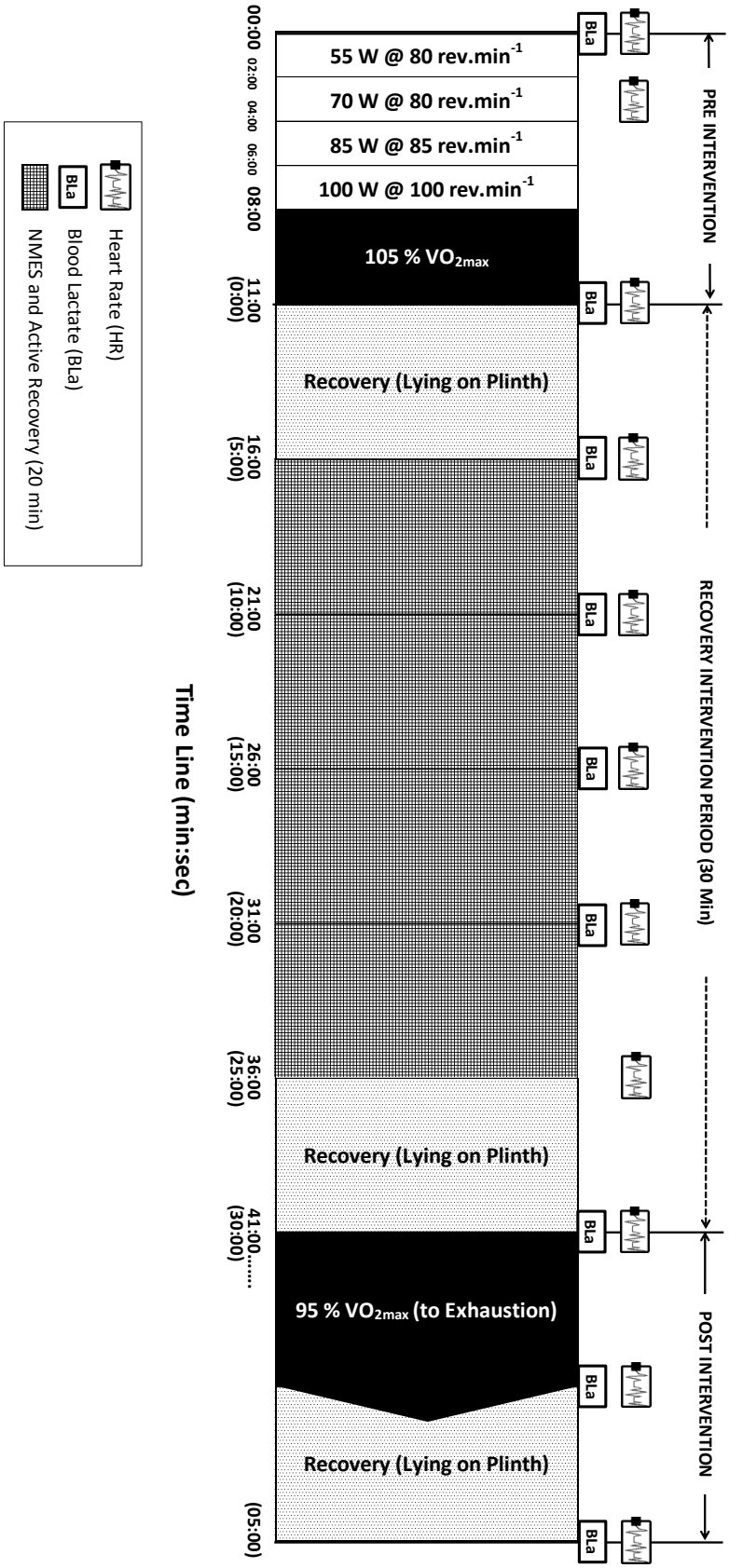

Figure 3: Study protocol timeline showing pre-intervention (L), recovery intervention (M) and post-intervention (R).

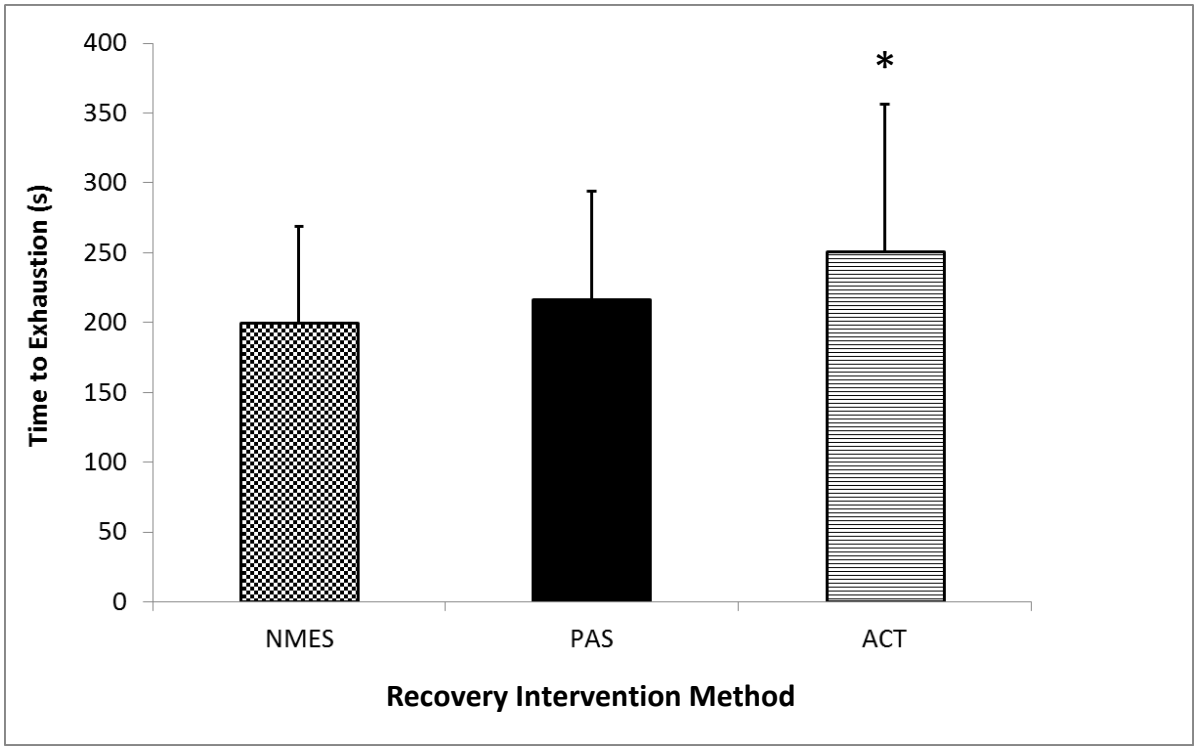

Figure 4: Participant data (Mean ± SD) for time to exhaustion (T_{LIM}) during post intervention exercise bout @ 95% VO_{2max} for NMES, PAS and ACT recovery interventions.

***** Significant difference between ACT vs. NMES recovery interventions ($P < 0.05$).

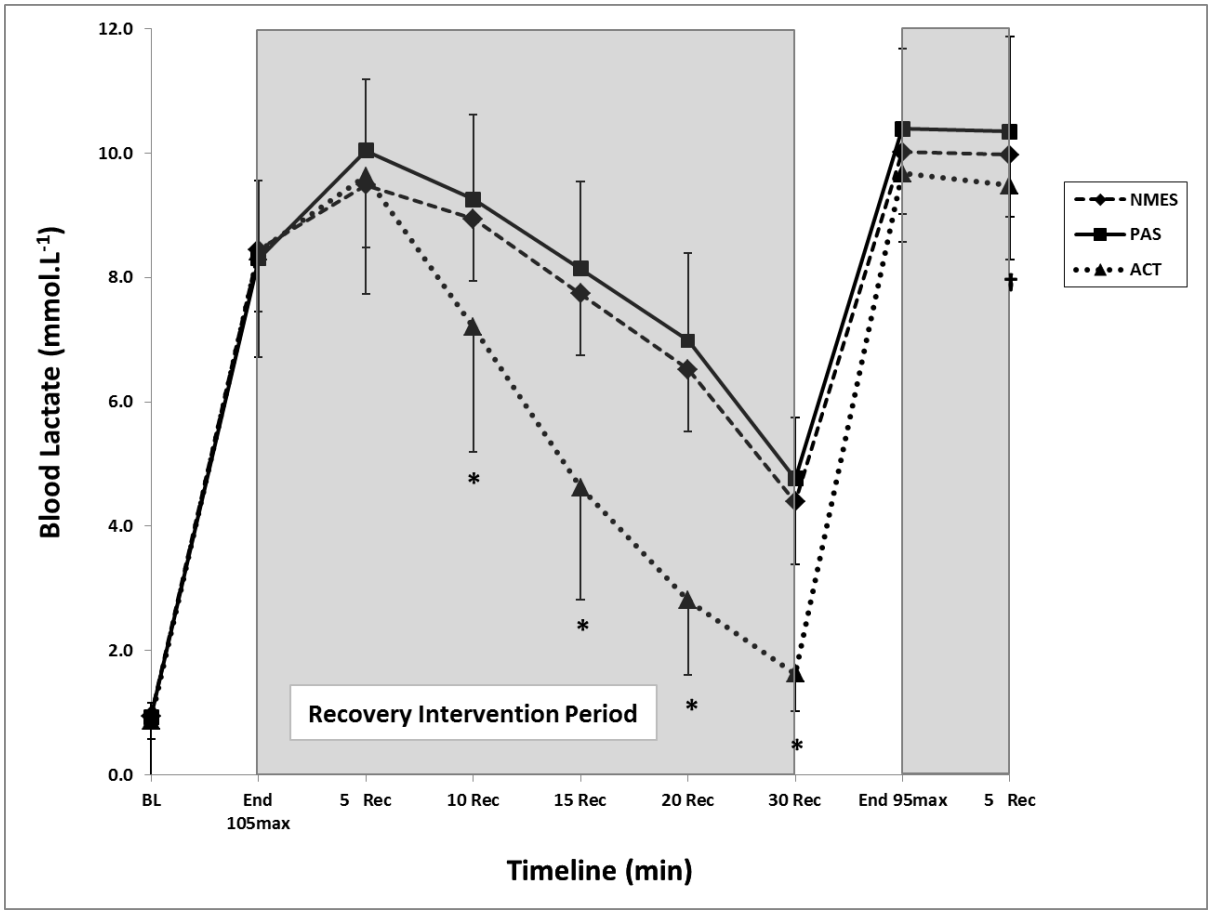

Figure 5: Participants BLa (Mean ± SD) during study protocol for NMES, PAS and ACT recovery interventions

***** Significant difference between ACT vs. NMES and PAS recovery interventions ($P < 0.001$)
† Significant difference between ACT vs. PAS recovery interventions ($P < 0.05$).

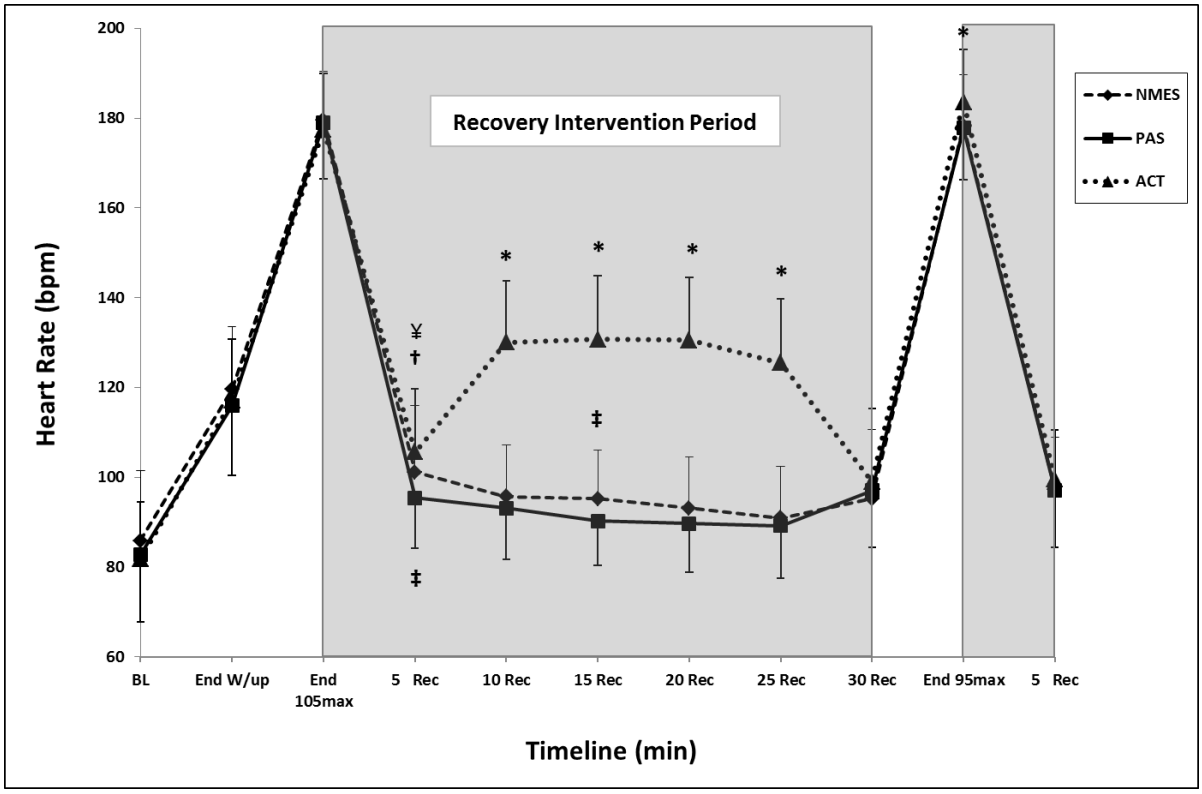

Figure 6: Participants HR (Mean ± SD) during study protocol for NMES, PAS and ACT recovery interventions.

***** Significant difference between ACT vs. NMES and PAS recovery interventions ($P < 0.001$)
† Significant difference between ACT vs. PAS recovery interventions ($P < 0.001$)
‡ Significant difference between NMES vs. PAS recovery interventions ($P < 0.05$)
¥ Significant difference between NMES vs. ACT recovery interventions ($P < 0.05$).