Research Repository UCD

Title	Optimal voltage control settings for wind power
Authors(s)	Keane, Andrew, Ochoa, Luis, Dent, Chris, Harrison, Gareth
Publication date	2009
Publication information	Keane, Andrew, Luis Ochoa, Chris Dent, and Gareth Harrison. "Optimal Voltage Control Settings for Wind Power." Institution of Engineering and Technology, 2009. https://doi.org/10.1049/cp.2009.0597.
Conference details	Paper presented at the 20th International Conference and Exhibition on Electricity Distribution (CIRED 2009), 8-11 June, 2009, Prague, Czech Republic
Publisher	Institution of Engineering and Technology
Item record/more information	http://hdl.handle.net/10197/3219
Publisher's version (DOI)	10.1049/cp.2009.0597

Downloaded 2026-05-01 23:36:09

The UCD community has made this article openly available. Please share how this access benefits you. Your story matters! (@ucd_oa)

© Some rights reserved. For more information

OPTIMAL VOLTAGE CONTROL SETTINGS FOR WIND POWER

Andrew KEANE
University College Dublin – Ireland
andrew.keane@ucd.ie

Luis OCHOA
University of Edinburgh – UK
luis.ochoa@ieee.org

Chris DENT
University of Edinburgh – UK
chris.dent@ed.ac.uk

Gareth HARRISON
University of Edinburgh – UK
gareth.harrison@ed.ac.uk

ABSTRACT

High penetrations of wind power on distribution networks are causing voltage rise on many networks. This voltage rise is limiting the permissible penetration levels of wind. Numerous active control schemes have been proposed to solve this issue, but widespread adoption of active management by network operators has yet to occur. Here, the fixed power factors of the generators' and the tap setting of the transmission transformer are optimally determined such that the voltage rise barrier is overcome and more wind can connect. The impact on the transmission system is becoming increasingly important and is also taken account of in the method. The method is tested on a sample section of distribution network illustrating that the optimal selection of voltage control settings can deliver some of the benefits of active management without any of the expense or perceived risk.

INTRODUCTION

The penetration of wind power is fast increasing on distribution networks across the world. These generators pose well established technical challenges to the existing network infrastructure. However, ambitious government targets and generally increasing oil and gas prices have served to maintain and indeed accelerate this increasing demand for wind power connections. These factors combined have presented a considerable challenge to distribution network operators (DNOs). They must now both facilitate the connection of wind onto networks which were not designed for generation, whilst maintaining the DNO's primary role of delivering a secure and reliable supply of electricity to consumers.

The main technical barrier to wind on distribution networks has been found to be voltage rise due to increasing active power injections from wind [1]. It is mainly an issue on rural networks due to their high impedance and low X/R ratio. A range of planning and operational methods have been proposed to alleviate the voltage rise barrier. In [2] and [3] methods for the optimal allocation of Distributed Generation (DG) subject to the network constraints were proposed using OPF and linear programming respectively. A number of active voltage control schemes have also been proposed utilising power factor control and tap changers in both a centralised and distributed manner [4,5,6]. The transition from a passive network to an active one has been widely mooted but, in spite of the range of voltage control methods developed, there has yet to be widespread migration to active network management. The vast majority of work in this area has ignored the impact on the transmission system. However, increasing penetrations of distributed generation mean that a noticeable impact on the transmission system is now being seen in some quarters. In particular it has been shown that large reactive power demands from distributed generation can cause voltage problems for the transmission system at certain operating points [7].

In [8], a novel approach to active management was proposed where rather than utilising DG to control the bus voltage, power factor control was designed to negate any impact of that generator's active power output. This then allows the DNO to connect increased DG, but in the old 'fit and forget' manner. Another, more recent issue encountered, has been the impact of large penetrations of DG on the transmission system. The selection of a fixed inductive power factor by the DNO serves to alleviate the voltage rise issue, however the result is a large reactive power demand being made on the transmission system, causing voltage problems for the transmission system operator (TSO) at times of high wind output [7].

In this paper a method is proposed to determine the optimal power factors for wind power on radial networks. It is proposed here to determine a single power factor setting for each generator that will facilitate more wind than the current fixed power factors and reduce the negative impact on the transmission system. The on load tap changer of the transmission transformer is also included as a variable in this formulation. This will be achieved by the formulation of an optimisation method which will take account of the capacity of the generation, its reactive power capability, the total wind reactive power, the normal and standby configuration of the network and the sensitivity of each network bus to reactive power injections at all buses. In so doing the method will achieve many of the benefits of current active management methods but through a passive method which will satisfy both the DNO and TSO. Wind is a highly variable energy resource and its variability is captured through a time series simulation which validates the optimal settings.

The following section contains a description of the optimal power factor method. The methodology is implemented and tested on a sample section of distribution network with a description of the network data and optimisation parameters given. Results and discussion illustrating the benefits of the methods are also shown.

METHODOLOGY

The calculation of the optimal voltage control settings requires a range of factors to be included in the formulation of the objective function and constraints. The optimal settings are determined using linear programming (LP), of which the decision variables are Q_i gives the generation reactive power and ΔV_{Tap} the tap changer setting..

Objective Function

The objective of the optimisation is to maximise the sum of reactive power injections across all buses with a reactive power resource. The maximisation of total reactive power is chosen as the objective because it is equivalent to minimising reactive power import from the transmission system and will lead to the minimisation of the impact on the transmission system. In addition, on voltage constrained networks, generators at voltage sensitive buses require inductive power factors, i.e. act as reactive power sinks. As a result, the maximisation will result in an allocation of reactive power resources that satisfies the constraints with the least amount of inductive reactive power as will be shown later in the results section. The objective function (J (MVAr)) is

$$Max: \; J = \sum_{i=1}^{N} Q_i \; , \qquad (1)$$

where Q_i gives the generation reactive power at the ith bus and N is the number of buses. The optimisation is calculated for the maximum generation, minimum load operating point. This is the worst case scenario for voltage rise, hence if the voltage rise constraint is obeyed at this point, it will be for obeyed for all possible operating points. An important factor is that the reactive power capability of the generators decreases with active power output, according to the typical P-Q relationship for generators. This has the effect that as the active power which is the cause of voltage rise decreases, the reactive power which is used to counteract this effect also decreases. This formulation can also take account of any existing or proposed reactive power resources on the networks, allowing the calculation of their optimal setting.

Reactive Power Capability

The distribution code in Ireland and elsewhere require all generators connecting to the network to be able to operate between power factors of 0.90 inductive and capacitive [9]. In Ireland, the UK and other countries generators operate at a fixed power factor, with a value of 0.95 (inductive) being a typical setting. Here, it is assumed that all generation on the network satisfies these requirements and the reactive power limit of the generation are added to the formulation as a constraint, given by,

$$PF_i \geq PF_{\max} \; (Capacitive \,\&\, Inductive) \; i \forall N \qquad (2)$$

where PF_i is the power factor of generation at the ith bus. PF_{min} and PF_{max} are the minimum and maximum rated power factor settings of the generator at the ith bus.

Voltage Level

The method is formulated assuming there is existing wind power installed on the network section. These generation capacities and load levels are employed to calculate the voltage level before the reactive power injection from the generators. Key parameters in the LP formulation of the voltage constraint are the reactive power bus voltage sensitivities and the transformer tap changer setting, a description of each is given now.

Reactive Power Bus Voltage Sensitivities

The sensitivity of the bus voltages to reactive power (ρ_{ij}, kV/MVAr) play a key role in determining at what level the power factors should be set. These sensitivities define how much the voltage changes per MVAr change in reactive power. Reactive power from a generator can affect not only the bus to which that generator is connected but also to other nearby dependent buses.

The voltage sensitivities are dependent on the structure and impedance of the network. In radial distribution systems, feeders are separated by normally open points which define the normal feeder configuration. The N-1 feeder configuration is also important to consider as it is used under contingency and maintenance conditions. The DNO may also decide to move the normally open points for other network reasons. The reactive power bus voltage sensitivities are therefore calculated for both the normal and N-1 feeder configuration. The N-1 configuration often presents a reduced margin for voltage rise, hence it is important that it is considered.

The sensitivities are calculated through ac load flow analysis with DIgSILENT Powerfactory. Reactive power is injected incrementally at each bus in turn and the voltage recorded. Results illustrating these sensitivities are shown later in Fig. 2.

Transformer Tap Changer

The transformer at the transmission system substation is equipped with an on load tap changer as is generally the case. This is typically set to its highest permissible value to ensure there are no low voltage conditions at the end of the feeders. In some cases there may be scope to lower this setting and increase the voltage margin for wind. The tap changer setting is included as a variable in the optimisation model. It is given by ΔV_{Tap} in p.u. and can vary according to the constraint given in

$$-0.1 \leq \Delta V_{Tap} \leq 0 \qquad (3)$$

where 0p.u. indicates an unchanged tap setting from its default value, with a lower limit of -0.1p.u.

For the voltage constraint to be satisfied the voltage at each bus must be kept within its upper and lower limits. The critical operating points in each case are (maximum generation, minimum load) and (zero generation, maximum load) respectively.

Upper Voltage Limit

The upper voltage limit is given as

$$V_{\mathrm{BaseUp}\,i} - \Delta V_{Tap} + \sum_{j=1}^{N} \rho_{ij} Q_j \le V_{\max i} \quad i \,\forall\, N \quad . (4)$$

It is the worst case scenario voltage rise from the generators that is of interest here, hence the base voltages ($V_{BaseUp\,i}$) in this case are under minimum load conditions and maximum generation active power at unity power factor conditions. ρ_{ij} gives the voltage sensitivity of the *j*th bus to reactive power at the ith bus and V_{max} gives the maximum permissible voltage.

Lower Voltage Limit

The lower voltage limit is given as

$$V_{BaseLow\,i} - \Delta V_{Tap} \ge V_{\min i} \quad i \,\forall\, N \,. \qquad (5)$$

V_{min} is the lowest permissible voltage. The relevant operating point in this case is no generation, maximum load conditions, it being the worst case scenario for low voltage. Both of these constraints must be satisfied under N and N-1 conditions.

Transmission System Requirements

Increasing penetrations of wind on distribution networks are beginning to cause concerns for TSOs. In particular, the reactive power demanded by wind is presenting a drain on the transmission systems reactive power resources [7]. To limit this effect a constraint is added to the formulation limiting the overall power factor seen by the transmission system to 0.98 (inductive or capacitive) as shown in,

$$PF_{TotalGen} \ge 0.98\,(Capacitive \,\&\, Inductive) \qquad (6)$$

where $PF_{TotalGen}$ gives the overall power factor of the generation, i.e. the generation power factor (i.e. excluding the load) that is seen by the TSO at the bulk supply point.

NETWORK DATA AND OPTIMISATION PARAMETERS

The methodology is applied on a sample section of distribution network, which is modelled using DIgSILENT Powerfactory. The network section analysed is a typical rural section of the Irish 38kV distribution network, shown in Fig. 1.

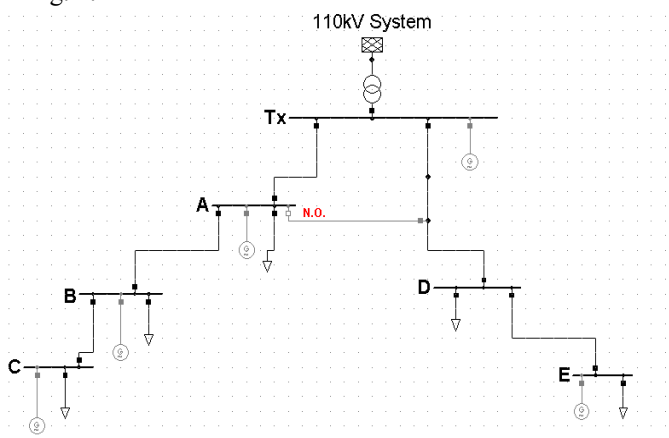

Fig. 1 38kV 5 bus radial distribution network diagram

A proposed wind scenario of 32MW to be connected on the network across six of the buses (including the transmission bus) with no generation connected at one of the buses is assumed. The proposed installed wind capacity for each bus is shown in Table 1. It is assumed that all the turbines comply with the Irish grid code, hence PF_{min} is 0.90 inductive and 0.90 capacitive respectively for all generators. It is also assumed that there are no capacitors banks connected or planned for connection. The base values for voltage at all buses are also shown in Table 1. These are relevant to the upper and lower voltage limit

	A	B	C	D	E	Tx
Wind (MW)	6	5	7	0	8	6
$V_{Base\ Up}$	40.73	40.00	39.85	39.93	39.80	41
$V_{Base\ Low}$	39.93	36.33	35.10	38.37	38.15	41

Table 1.Wind Installed (MW) and Base Voltages (kV)

Reactive Power Bus Voltage Sensitivities

The sensitivity of the bus voltages to reactive power (ρ_{ij}, kV/MVAr) play a key role in determining what level the power factors should be set. These sensitivities for the normal feeder configuration are shown in Table 2. The N-1 sensitivities are also calculated and employed in the optimisation to ensure that no constraint breaches occur under contingency conditions. It was found that the sensitivities generally increased under N-1 conditions but that the sensitivity to active power also increased, with the result that an the N-1 condition did not present a more severe constraint as may have been expected.

	A	B	C	D	E	Tx
A	0.0274	0.0272	0.0272	0	0	0
B	0.0275	0.2292	0.2287	0	0	0
C	0.0277	0.2313	0.3663	0	0	0
D	0	0	0	0.3898	0.3895	0
E	0	0	0	0.3917	0.4456	0
Tx	0	0	0	0	0	0

Table 2. Reactive Power Voltage Interdependency (kV/MVAr)

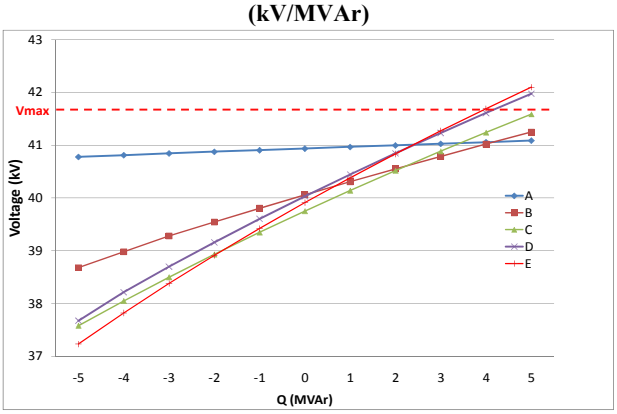

Fig. 2 Individual bus voltage sensitivities to reactive power injections at that bus (kV/MVAr)

Fig. 2 shows the voltage sensitivity characteristics of each bus to reactive power injections at that bus. It can be seen that the sensitivity of the buses increases with distance (impedance) from the fixed voltage transmission bus, with the buses C and E the most voltage constrained. The bus voltage sensitivities are calculated from the characteristics shown Fig. 2 as the gradient of a chord each. The length of each chord is selected based on a realistic size of reactive power capability.

RESULTS

The results shown here illustrate the benefits of the optimal power factor settings. The wind installed is assumed to be as shown in Table 1. The optimal power factors were solved by a linear programming algorithm and found to be as shown in Table 3. The optimal tap setting is also shown in this table and was determined to be -0.01pu. The ability of the transformer to move to this voltage level will be dependent on the step size of its tap changer.

Bus	PF
A	0.90 (Cap.)
B	0.93 (Ind.)
C	0.90 (Ind.)
D	-
E	0.94 (Ind.)
Tx	0.90 (Cap.)
$PF_{TotalGen}$	0.998 (Ind.)
ΔV_{Tap}	-0.01pu

Table 3. Optimal Power Factors & Tap Setting

Wind Capacity

One of the benefits of the optimal power factor settings is that they will facilitate greater levels of generation to connect than the 0.95 inductive or unity power factors that are generally selected by the DNO. The voltage levels resulting from these power factors are now compared to the more typical scenario of 0.95 inductive and unity power factor. Firstly, they are compared for the worst case of maximum generation, minimum loads. The maximum allowable voltage on the Irish 38kV network is 41.7kV. It was found that the 0.95 inductive power factors resulted in overvoltages of 41.74kV, 41.77kV and 41.92kV at buses C, D and E respectively under normal feeder conditions. Under N-1 feeder conditions the overvoltages were more severe than under the normal feeder configuration. By scaling back the generation in steps at the voltage constrained buses (C & E) and recalculating the load flow it was found that the maximum generation capacity that can connect at these buses with 0.95 fixed power factors is 29.3MW. The optimal power factors have therefore facilitated the proposed 32MW of generation connect at no extra cost. Under the same conditions for unity power factors the total amount of generation that can connect is 22.4MW which is a reduction of 9.6MW. These results are summarised in Fig. 3.

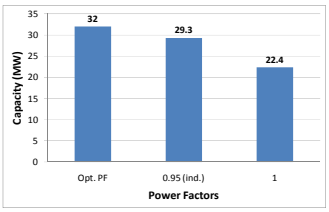

Fig 3. Generation Capacities under each Power Factor Scenario

This snapshot analysis confirms that the 32MW of generation can now connect with the optimal power factors as it satisfies the voltage constraint under normal and N-1 feeder conditions. However, wind output is highly variable and the load will vary according to the time of day and season. It is important therefore to assess the temporal performance of these power factors over a year. In particular, in terms of the impact on the transmission system. To achieve this, an annual time series simulation was performed consisting of half hourly ac load flow calculations. Data for historical time series for the load was obtained from ESB Networks, the Irish DNO [10]. Two historical wind time series were used. The wind farms are located approximately 35km apart. Time series for each bus were not available so the network was split into two areas, with buses A, B & C utilising one time series and buses D, E and Tx utilising the second time series.

Transmission System Impact

A number of scenarios are simulated, with fixed power factors of 0.95 inductive and zero generation assessed along with the optimal power factor settings. The results for the zero generation case are approximately equal to those expected for a unity power factor case. The impact of the wind generation on the transmission system is monitored throughout the year in terms of the reactive power seen at the bulk supply point ($Q_{Imported}$). The statistical properties of $Q_{Imported}$ for the year are shown in Table 4.

$Q_{Imported}$ (MVAr)	Zero Gen.	0.95 (Ind.)	Opt. PF
Max.	4.639	16.105	7.380
Min.	1.037	0.896	0.897
Mean	2.577	6.894	3.621
Std. Dev. (σ)	0.719	4.500	1.655
Total (MVArh)	22,571	60,391	31,718

Table 4. Overall Generation Power Factor

It can be seen that under the fixed power factor scenario, the reactive power import from the transmission system is substantially increased. The standard deviation highlights that the introduction of wind power results in increased variability in reactive power. Under the optimal power factors the transmission system sees an average reactive power demand of 3.62MVAr. This represents an increase over the zero generation case, but is considerably less than the 0.95 value of 6.894MVAr. In this case the optimal power factor settings result in an overall power factor that is very close to unity power factor. This is beneficial to the TSO, but also facilitates extra generation capacity at no extra cost, which is beneficial to the DNO.

DISCUSSION

The method presented here is a purely passive approach. It highlights that a number of the benefits of active management can be achieved through optimal selection of settings. The voltage control capability of all distributed generation is a significant resource and, as has been demonstrated here, can be used in a passive manner for the benefit of the system. This method also provides a baseline against which active control methods could be measured and indicates the level of further benefits that active management should deliver if it is to achieve widespread adoption.

The impact on the transmission system of large penetrations of distribution connected wind is becoming increasingly important. The migration of large amounts of voltage control resources to the distribution system indicates that the utilisation of these resources is no longer an issue for just the DNO but also for the whole power system. This method takes account of the transmission system impact and utilises the reactive support resources for the benefit of the distribution system, but with the transmission system impact also considered.

This method could be employed to model a more active scheme, more general constraints could be implemented to take account of more active management of resources. For example if the tap changer settings were set on a seasonal or monthly basis, this would provide scope for extending the constraint limits of (5).

CONCLUSIONS

In this paper, an optimisation approach has been developed for voltage control settings for wind on distribution networks. The method optimises the power factor and tap changer settings of the network section such that voltage limits are obeyed and the transmission system impact of the wind power reduced. The connection of generation to the distribution network has resulted in the migration of significant voltage control resources to the distribution network. The power factor capabilities of generation on the transmission system have long been an important resource for TSOs. Now the equivalent capabilities of distributed generation are gaining more importance and adding more importance to existing distribution control measures such as the on load tap changer at the bulk supply point. The optimisation method proposed here captures these capabilities and minimises the reactive power import from the transmission system.

REFERENCES

[1] C. Masters, “Voltage rise the big issue when connecting embedded generation to long overhead 11kV lines,” *IEE Power Engineering Journal.*, pp. 5–12, Feb. 2002.

[2] G. Harrison and A. Wallace, “Optimal power flow evaluation of distribution network capacity for the connection of distributed generation,” *Generation, Transmission and Distribution, IEE Proceedings-*, vol. 152, no. 1, pp. 115–122, Jan. 2005.

[3] A. Keane and M. O’Malley, “Optimal utilisation of distribution networks for energy harvesting,” *IEEE Trans. Power Syst.*, vol. 22, no. 1, pp. 467– 475, 2007.

[4] C. Hird, H. Leite, N. Jenkins, and H. Li, “Network voltage controller for distributed generation,” *IEE Proc. Gener. Transm. Distrib.*, vol. 151, no. 2, pp. 150–156, Mar. 2004.

[5] S. Liew and G. Strbac, “Maximising penetration of wind generation on existing distribution networks,” in *IEE Proc.-Gener. Transm. Distrib.*, vol. 149, May 2003, pp. 256–262.

[6] P. Vovos, A. Kiprakis, A.Wallace, and G. Harrison, “Centralized and distributed voltage control: Impact on distributed generation penetration,” *Power Systems, IEEE Transactions on*, vol. 22, no. 1, pp. 476–483, Feb. 2007.

[7] P. Carvalho, P. F. Correia, and L. Ferreira, “Distributed reactive power generation control for voltage rise mitigation in distribution networks,” *IEEE Transactions on Power Systems*, vol. 23, no. 2, pp. 766–772, May 2008.

[8] E. Vittal, A. Keane, and M. O’Malley, “Varying penetration ratios of wind turbine technologies for voltage and frequency stability,” in *IEEE PES General Meeting*, Pittsburgh, July 2008.

[9] *Irish Distribution Code*, ESB Networks Std. v1.2, 2002.

[10] ESB Networks. (2007) ESB Networks infrastructure.

Available: http://www.esb.ie/esbnetworks/

ACKNOWLEDGMENTS

The authors gratefully acknowledge ESB Networks, EirGrid and their colleagues in the Electricity Research Centre for their help with this work.