Title	Wideband electrostatic Vibration Energy Harvester (e-VEH) having a low start-up voltage employing a high-voltage integrated interface
Authors(s)	Dudka, Andrey, Basset, Philippe, Cottone, Francesco, Blokhina, Elena, Galayko, Dimitri
Publication date	2013-12
Publication information	Dudka, Andrey, Philippe Basset, Francesco Cottone, Elena Blokhina, and Dimitri Galayko. "Wideband Electrostatic Vibration Energy Harvester (E-VEH) Having a Low Start-up Voltage Employing a High-Voltage Integrated Interface." IOP Publishing, 2013.
Conference details	PowerMEMS, The 13th International Conference on Micro and Nanotechnology for Power Generation and Energy Conversion Applications, 3-6 December, London, UK
Publisher	IOP Publishing
Item record/more information	http://hdl.handle.net/10197/5400
Publisher's statement	Content from this work may be used under the terms of the Creative Commons Attribution 3.0 licence. Any further distribution of this work must maintain attribution to the author(s) and the title of the work, journal citation and DOI.
Publisher's version (DOI)	10.1088/1742-6596/476/1/012127

Wideband Electrostatic Vibration Energy Harvester (e-VEH) Having a Low Start-Up Voltage Employing a High-Voltage Integrated Interface

A. Dudka[1*], P. Basset[2], F. Cottone[2], E. Blokhina[3], D. Galayko[1]

[1]LIP6-UPMC – Sorbonne, France,
[2]Université Paris-Est, ESYCOM, ESIEE Paris, France
[3]UCD, Ireland

E-mail: *andrii.dudka@lip6.fr

Abstract. This paper reports on an electrostatic Vibration Energy Harvester (e-VEH) system, for which the energy conversion process is initiated with a low bias voltage and is compatible with wideband stochastic external vibrations. The system employs the auto-synchronous conditioning circuit topology with the use of a novel dedicated integrated low-power high-voltage switch that is needed to connect the charge pump and flyback - two main parts of the used conditioning circuit. The proposed switch is designed and implemented in AMS035HV CMOS technology. Thanks to the proposed switch device, which is driven with a low-voltage ground-referenced logic, the e-VEH system may operate within a large voltage range, from a pre-charge low voltage up to several tens volts. With such a high-voltage e-VEH operation, it is possible to obtain a strong mechanical coupling and a high rate of vibration energy conversion. The used transducer/resonator device is fabricated with a batch-processed MEMS technology. When excited with stochastic vibrations having an acceleration level of 0.8 g rms distributed in the band 110-170 Hz, up to 0.75 μW of net electrical power has been harvested with our system. This work presents an important milestone in the challenge of designing a fully integrated smart conditioning interface for the capacitive e-VEHs.

1. Introduction

The kinetic vibrations present in many environments are potential sources for the supply of autonomous microsystems. The Vibration Energy Harvesters based on electrostatic transducers (e-VEHs) are particularly suitable for miniature systems based on integrated CMOS and MEMS technologies. This, in turn, enables the integration of the transducer/resonator on the unique silicon substrate together with power processing and communication electronics.

To achieve a mechanical energy conversion, a conditioning circuit charges and discharges the transducer capacitance synchronously with the transducer capacitance variation [1]. Because of complexity and precision of the required control on the transducer electrical state, design of the conditioning circuit for electrostatic transducers is the main bottleneck associated with e-VEH implementation. Moreover, high bias voltage is necessary to achieve strong mechanical coupling with an electrostatic transducer. This fact, combined with ultra low power requirement for the control circuitry, makes the design of the conditioning circuit very challenging. The low power requirement is related with the fact the energy harvesting is self-supplying, and the power available from microscale e-VEH is of order of few microwatts.

Several architectures of conditioning circuit exist [1, 2]. Our study focuses on the architecture based on a charge pump with an inductive flyback (Fig. 1a), [3, 4]. In this circuit, the

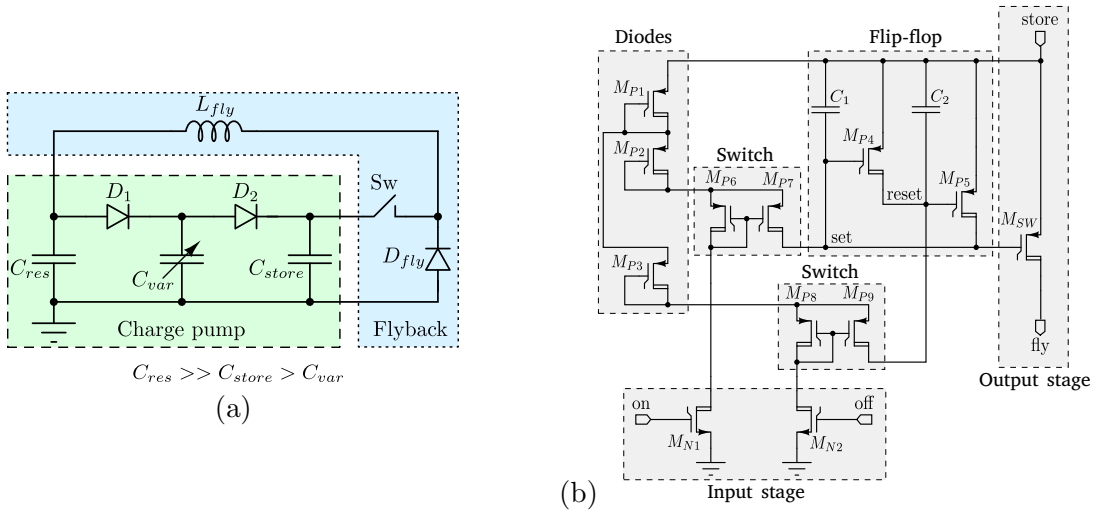

Figure 1. a) Energy harvesting system employing the auto-synchronous conditioning circuit initially proposed by B. Yen [4]; b) Proposed dynamic flip-flop level shifter driving the flyback switch M_{SW}, implemented in AMS035HV CMOS process.

synchronization of the charge flow is done internally thanks to the switching operation of the diodes D_1 and D_2. The unique switch Sw requiring an external control operates rarely (once during tens of vibration cycles), and a synchronization with the mass vibrations is not needed. A significant advantage of this circuit over charge-constant [1] or voltage-constant [2] architectures is its suitability for operation with a resonator excited by broadband stochastic vibrations. This is experimentally proven in our work.

This paper presents the first integrated on silicon high-side switch Sw commuting high voltage (tens of volts) between the charge pump and the flyback in the conditioning circuit of Fig. 1a. The high-side Sw requires a level shifting driver, which allows an interface with a ground-referenced low voltage control signal. To comply with the speed and power consumption requirements, we designed a novel ultra-low power level shifter with zero static power consumption. This driver can be used to implement a smart control algorithm so to adapt the conditioning circuit operation to different application contexts [5]. The implemented switch driver was tested in the circuit of Fig. 1 with a real MEMS resonator presented in [6] excited with stochastic vibrations.

In contrast with previous integrated circuits for capacitive transducer conditioning [2, 7], we target the level of operation voltages which exceed the gate drive voltages of the used technology (e.g., for the AMS035HV process the gate voltage is 3.3 V, and the maximal drain-source voltage is 50 V). That is because the full potential of electrostatic transducers for energy conversion may only be explored with high-voltage operation.

2. System of e-VEH: structure and operation

This section describes the operation of the circuit of Fig. 1a [4]. The role of the charge pump is to pump the charges from a large capacitor C_{res} (≈1-10 μF) toward a smaller capacitor C_{store} (≈1-5 nF), making use of the variation of the transducer capacitance C_{var} (≈10-100 pF) which varies between its extrema values C_{max} and C_{min}. As the charge pump operates, the voltage across C_{store} increases, while V_{res} remains virtually constant (since $C_{res} >> C_{store}$). The energy for the C_{store} voltage elevation comes from the mechanical domain. The converted energy is stored in the voltage difference $V_{store} - V_{res}$. When V_{store} becomes significantly above V_{res} and approaches the saturation value $V_{res}C_{max}/C_{min}$, the charge pump starts to deliver less and less energy to C_{store}, and the energy conversion rate (the power) decreases.

To avoid this decrease of the convered power, the voltage difference between V_{store} and V_{res} must be reduced. This is achieved using a flyback return circuit with an inductive BUCK DC-DC converter topology. When the switch Sw is on, the charges from C_{store} are transferred to C_{res} via the inductor L_{fly} and freewheeling diode D_{fly}, hence putting the total (injected and converted) energy on C_{res}.

Our theoretical analysis identified the optimal V_{store} voltage range (V_1, V_2), which corresponds to the maximal harvested power [8]. This result provides an indication of the optimal Sw switching sequence: the architecture implementing an optimal scenario is discussed in [5]. The bottleneck in implementation of this optimal operation is related to design of electrical interface between the control circuitry and the switch Sw. The main issue lies in the driving of the gate of a high-side MOS transistor with a low-voltage signal referenced to the ground. Therefore, an appropriate level shifter with very stringent power consumption specifications is needed. In the next section we present the designed architecture of a level shifter satisfying these requirements.

3. Switch driver architecture

The proposed level shifter is based on a zero static power topology based on an analog flip-flop [9], Fig. 1b. The flip-flop is composed of state-holding capacitors C_1, C_2 and high-voltage (HV) PMOS pull-up transistors M_{P4} and M_{P5}, as shown in Fig. 1b. The input stage consists of two HV NMOS transistors drawing the current from V_{store} when the pulses *on* or *off* are high.

Initially both inputs *on* and *off* are low, and the state of the flip-flop is so that *set* node voltage equals V_{store}, and *reset* node voltage is $V_{store} - 3V$. When *on* goes high, C_1 is charged to 3 V so that the *set* voltage become $V_{store} - 3V$; this turns M_{P4} on, further pulling up *reset* to V_{store} and discharging C_2. Consequently, M_{P2} turns off. In that way the state of the flip-flop changes to the opposite. The reset of the flip-flop occurs similarly when *off* goes high.

MOS diodes $M_{P1} - M_{P3}$ are used to limit the voltage drop to 3 V across the capacitors. The basic level shifter topology of [9] was supplemented with two switches M_{P6}, M_{P7} and M_{P8}, M_{P9}. They are used to electrically isolate the capacitors from discharge through the parasitic junction capacitances of the diodes, and thus to ensure stable states of the flip-flop during a long period without a need of refreshing.

The proposed level shifter and the high-side power switch have been fabricated in AMS035HV CMOS technology and successfully characterized. The measurement results have a good matching with simulations, as compared in Table 1.

Table 1. Level shifter and switch characteristics: measured versus simulated.

Characteristic	Measured	Simulated
Voltage range (V)	4−31	4−50
Switch ON-resistance (Ω)	32−46	39
Consumed static power (nW) (depending on V_{store} voltage)	0.8−44.8	0.44−111.7
Dynamic energy consumed per *on*/*off* cycle (nJ) (depending on V_{store} voltage)	0.065−1.38	0.05−2.92
Switching speed (ns)	73	40
Max. duration of *on*-state without refresh (s)	5.8	11.2

4. Experiment

The goal of the experiment focuses on testing the operation of the e-VEH presented in (Fig. 1a), with use of the designed and fabricated switch/driver block. The energy conversion process is characterized by the charges accumulated on the reservoir capacitor C_{res}, which can be visualized by the voltage measurement on this capacitor.

The schematic of the test setup of the e-VEH system is given in Fig. 2. The circuit is initially energized with an external DC voltage source, which was connected for a short time to C_{res} and

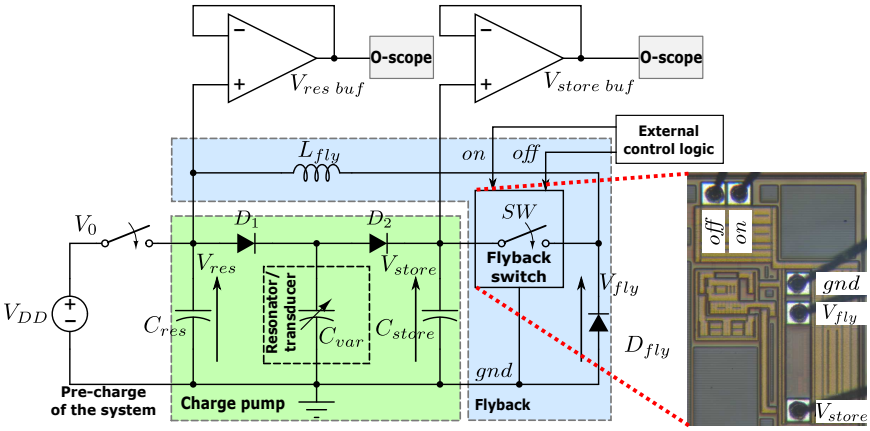

Figure 2. Schematic of a studied vibration energy harvester and micro-photograph of the implemented block.

so pre-charging it to a low initial voltage $V_0 = 5.5V$. The implemented flyback switch whose micro-photograph is illustrated in Fig. 2, is driven by the external control logic that generates periodically a sequence of *on* and *off* signals. A high input impedance and low offset operational amplifiers are used for the voltage probing across C_{res} and C_{store}.

The MEMS transducer/resonator device employed in the experiment was fabricated and fully characterized [6]. The resonance frequency of the resonator is 162 Hz. In large amplitude mode (1g of external vibration acceleration), it has half-power bandwidth of more than 30 % of the central frequency. The transducer capacitance varies between 45 pF and 74 pF.

When the external voltage source V_{DD} is disconnected from C_{res}, the e-VEH system becomes electrically autonomous, with the exception of the power source for the external control logic. The mechanical resonator is submitted to stochastic external vibrations whose energy is distributed in the frequency band (100-180) Hz.

5. Measurement results

The experiments described above were repeated with three sets of acceleration amplitude and bandwidth of vibrations. For the first, second and third experiments vibration parameters are 0.7 g rms @ 100-180 Hz, 0.8 g rms @ 110-170 Hz and 1 g rms @ 90-175 Hz, respectively. All three tests started with C_{res} pre-charged to 5.5 V. The flyback activation frequency was 5 Hz.

Fig. 3 presents the evolution in time of C_{res} voltage (upper plot) and energy (bottom plot). After 3000-4000 seconds of autonomous system operation, the voltage across C_{res} rises up to 15-20 volts. Sudden drops of the V_{res} voltage can be observed. This occurs as V_{res} voltage reaches a level at which a dynamic pull-in occurs. The V_{res} drops are due to a short circuit between the plates of the variable capacitor C_{var}: when it happens, C_{res} discharges very fast through the diode D_1 until the voltage at which the pull-in effect disappears. This is an undesirable effect related with the physics of the MEMS device presented in [6]. The voltage of dynamic pull-in depends on the acceleration amplitude of the external vibrations: at lower acceleration amplitudes, the dynamic pull-in voltage is higher. As a result, the higher levels of V_{res} can be achieved at lower acceleration amplitude, as shown by the measurement. The short circuit "emulates" a load consuming the energy of the storage capacitor, and it can be seen that the energy production on C_{res} is stable on the observed time interval (4000-7000s)

During three experiments the maximum achievable V_{res} voltage was 21 V, 21.5 V and 17 V, this corresponds to the energy on C_{res} of 220 μJ, 230 μJ and 145 μJ, respectively (to be compared with the initial energy of 15 μJ corresponding to $V_{res} = V_0$). The maximal average energy conversion rate (power) measured as the slope of the straight segments of the energy curve is

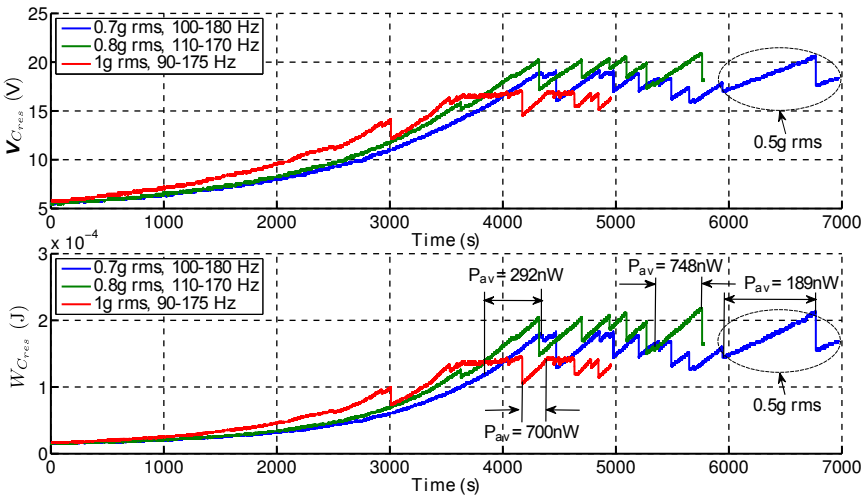

Figure 3. Evolution of the state of the studied system in autonomous mode submitted to stochastic external vibrations, with three different stimuli. Upper plot: the voltage across the reservoir capacitor $C_{res} = 1\mu$F, lower plot: the energy of C_{res}.

between 190 nW and 750 nW (cf. Fig. 3, lower plot). These figures give the net energy and power available for the load supply, accounting for the consumption of the flyback switch, losses in reactive elements and in the diodes.

6. Conclusions

We presented an investigation in the design of e-VEH system based on the auto-synchronous architecture. The work addressed a novel integrated ultra-low power high-voltage switch employed in the conditioning circuit. With the use of the implemented switch we tested the autonomous operation of the MEMS capacitive energy harvester excited with stochastic vibrations in a large bandwidth 100-180 Hz. Initially biased to 5.5 V with 15 μJ, the system increased its voltage up to 21.5 V with the accumulated energy 230 μJ. The maximal measured net power is 748 nW without considering supply of the generator of switching events. The design of a latter block is a subject of ongoing work.

References

[1] S. Meninger, J. Mur-Miranda, R. Amirtharajah, A. Chandrakasan, and J. Lang, "Vibration-to-electric energy conversion," *IEEE Trans. on VLSI Systems*, vol. 9, no. 1, pp. 64–76, Feb. 2001.

[2] E. O. Torres and G. A. Rincón-Mora, "Electrostatic energy-harvesting and battery-charging CMOS system prototype," *IEEE Trans. on Circuits and Systems I: Regular Papers*, vol. 56, no. 9, pp. 1938–1948, 2009.

[3] S. Roundy, P. K. Wright, and J. Rabaey, "A study of low level vibrations as a power source for wireless sensor nodes," *Computer Communications*, vol. 26, no. 11, pp. 1131–1144, Jul. 2003.

[4] B. C. Yen and J. H. Lang, "A Variable-Capacitance Vibration-to-Electric Energy Harvester," *IEEE Transaction on Circuits and Systems–I: Regular papers IEEE*, vol. 53, no. 2, pp. 288–295, 2006.

[5] A. Dudka, D. Galayko, and P. Basset, "Design of integrated smart adaptive conditioning circuit for capacitive vibration energy harvester," in *Workshop of Energy and Wireless Sensors*, Besançon, France, 2012.

[6] R. Guillemet, P. Basset, D. Galayko, F. Cottone, F. Marty, and T. Bourouina, "Wideband MEMS electrostatic vibration energy harvesters based on gap-closing interdigited combs with a trapezoidal cross section," in *Micro Electro Mechanical Systems, 2013 IEEE 26th International Conference on*, 2013, pp. 817–820.

[7] A. Kempitiya, D.-A. Borca-Tasciuc, and M. M. Hella, "Low-Power Interface IC for Triplate Electrostatic Energy Converters," *IEEE Transactions on Power Electronics*, vol. 28, no. 2, pp. 609–614, Feb. 2013.

[8] D. Galayko, R. Pizarro, P. Basset, A. M. Paracha, and G. Amendola, "AMS modeling of controlled switch for design optimization of capacitive vibration energy harvester," *2007 IEEE International Behavioral Modeling and Simulation Workshop*, pp. 115–120, Sep. 2007.

[9] P. Basset, "Conception, réalisation et test d'un micro système de transport alimenté à distance," Ph.D. dissertation, Univesité de Lille1, 2003.